Form No. 3478-948 Rev A

RZ-XD HD 54in Mower

Model No. RSZL2154FX730—Serial No. 420000000 and Up

Parts Catalog

Register at www.joinspartannation.com.
Original Instructions (EN)

3478-948 A

Ordering Replacement Parts

To order replacement parts, please supply the part number, the quantity, and the description of each part desired.

Understanding Reference Numbers

Each identified part in an illustration has a reference number. The reference number for a part also appears in the parts list, along with other information about the part.

This catalog uses two special reference number formats, one to indicate parts in a service assembly and another to indicate the quantity of a given part in an illustration.

Service Assembly Reference Numbers

Parts in service assemblies have reference numbers in the form a:b. The a represents the reference number of the entire service assembly and the b represents a sequential number unique to each part within the service assembly.

For example, a wheel assembly might be identified by reference number 6, the tire by 6:1, the valve by 6:2, and the wheel by 6:3. When you order the assembly identified by reference number 6, you receive all parts identified by reference numbers 6:1,6:2, and 6:3. However, you may also order any part individually. Reference numbers of this type appear in illustration and in parts lists.

Reference Numbers Indicating Quantity

In an illustration, if a reference number indicates more than one part, the reference number has the form nX y. The n represents the quantity of the part, the X is the multiplication symbol, and the y represents the reference number.

For example, in an illustration, the reference number 2X 37 means that two of the parts identified by reference number 37 are indicated.

Contents

Main Frame Assembly 4
Frame with Decals Assembly No. 148-0997 6
Transmission Assembly 8
Body Styling Assembly 10
Seat Assembly 12
Motion Control and Parking Brake Assembly 14
Caster Tire Assembly 16
Drive Wheel Assembly 18
Electrical Assembly 20
Decklift Assembly 22
HOC Pin Assembly No. 148-1450 24
Engine Assembly 26
54 Inch Cutting Deck Assembly 28
Deck Decal Assembly No. 148-0977 30
Seat Suspension Assembly 32

© 2026—Spartan®
1525 White Drive
Batesville, AR 72501

Contact us at www.joinspartannation.com.
Printed in the USA.
All Rights Reserved

Main Frame Assembly

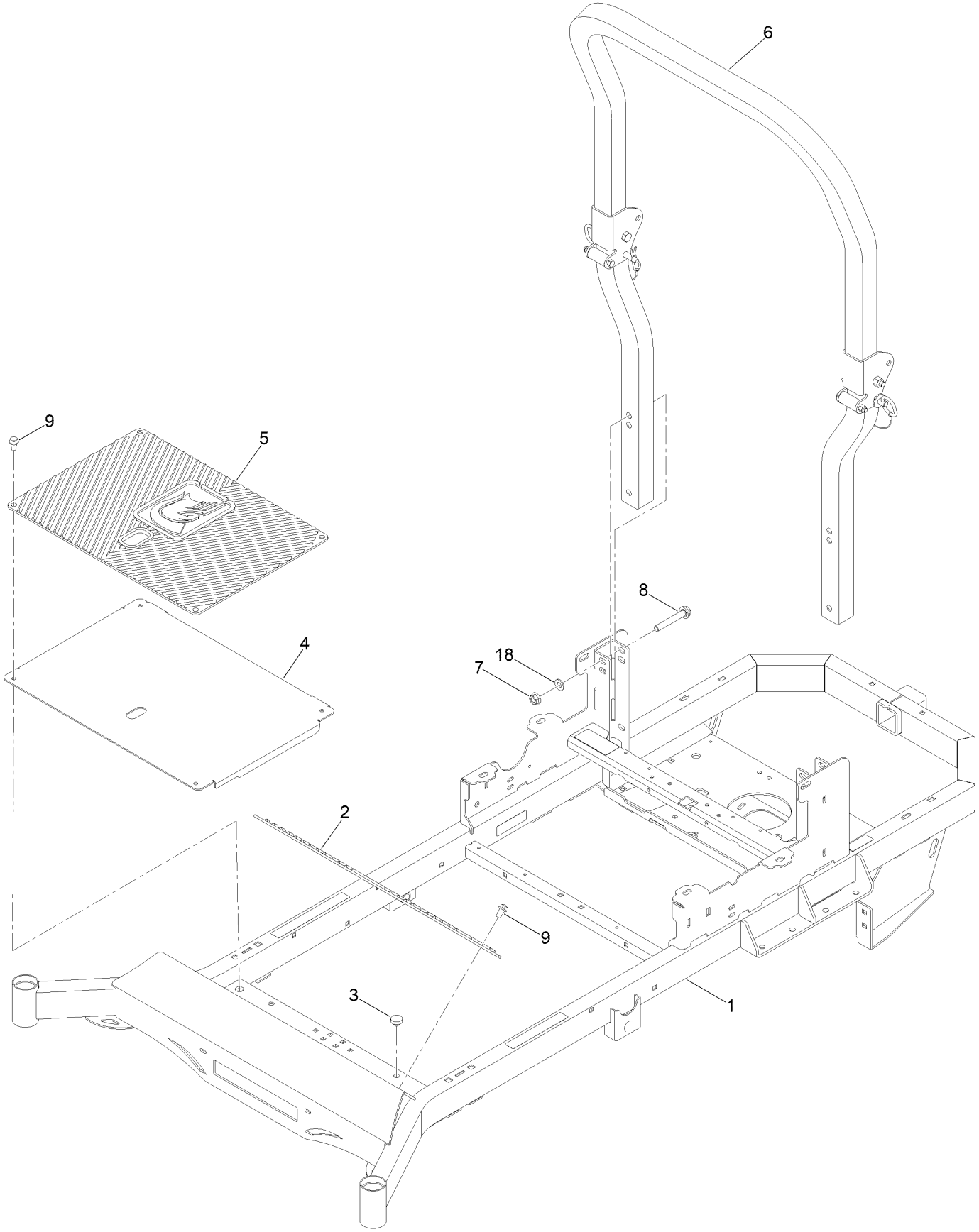

Main Frame Assembly (continued)

Ref.	Part Number	Qty.	Description
1	148-0997	1	Frame ASM-Decals
2	481-0005-00	1	Mwr Rubber Foot Rest Mat
3	429-0002-00	2	Push-In Rubber Bumper
4	439-0007-00-P11	1	Mwr Floorboard Paint
5	481-0006-00	1	Mwr Logo Floor Mat
6	148-0233	1	ROPS

Ref.	Part Number	Qty.	Description
7	413-0014-00	4	1/2-13 Hex Stover Locknut GR C Zinc
8	418-0019-00	4	Bolt-HF
9	414-0002-00	10	8MM Push Type Retainer Nylon Black
18	106-9888	4	Washer-Flat

Frame with Decals Assembly No. 148-0997

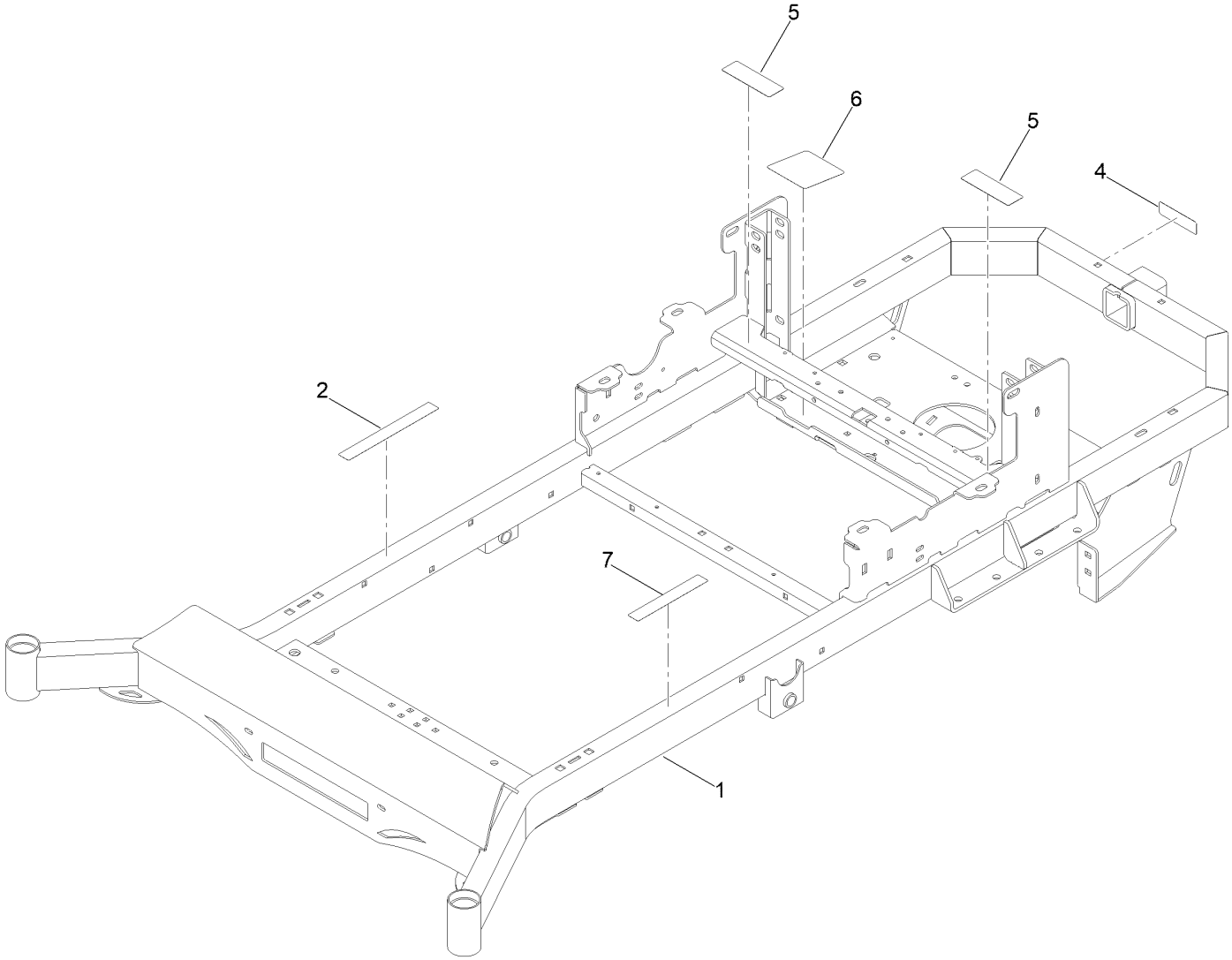

Frame with Decals Assembly No. 148-0997 (continued)

Ref.	Part Number	Qty.	Description
1		1	Ztr Frame ASM ●
2	148-1095	1	Decal-Warning
4	147-7364	1	Decal-Hitch
5	148-1308	2	Decal-Warn Rotating Device
6	148-1480	1	Decal-Belt Routing
7	148-1094	1	Decal-Warning

● Not serviced separately

Transmission Assembly

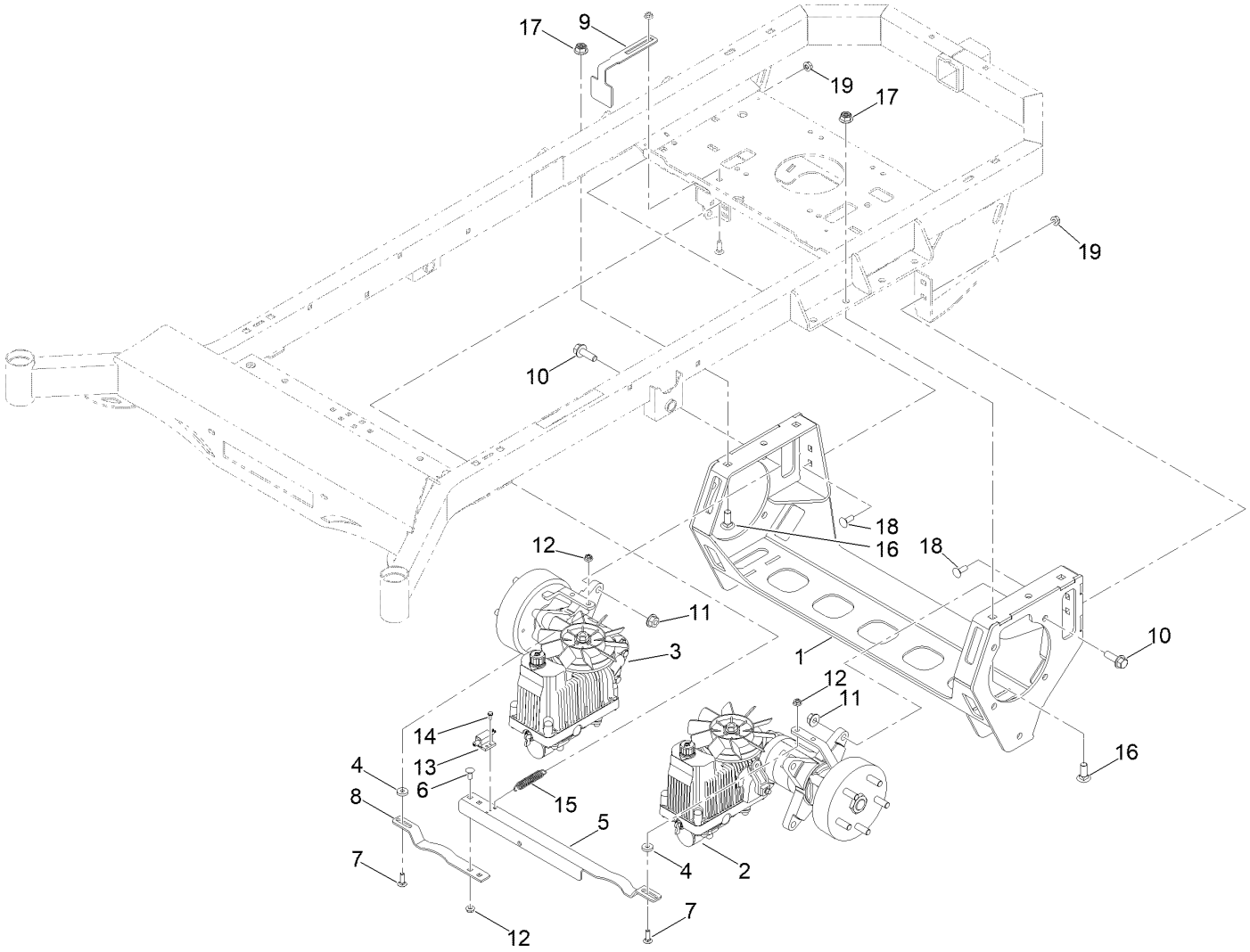

Transmission Assembly (continued)

Ref.	Part Number	Qty.	Description
1	148-0985-P11	1	Hydro Frame ASM
2	450-0009-00	1	Hte10 Lt Side Hydrost Transm For Rz Hub
3	450-0010-00	1	Hte10 Rt Side Hydrost Transm For Rz Hub
4	419-0006-00	2	.312 ID X .875OD X .1875 THK F/W NYL
5	439-0607-00-P11	1	Mwr Park Brake Brkt Lt Paint
6	418-0008-00	2	Bolt-CARR
7	418-0010-00	2	Bolt-CARR
8	439-0606-00-P11	1	Mwr Park Brake Brkt Rt Paint
9	439-0066-00-P11	1	Stand Trans Brake Interlock Brkt Paint
10	100-6116	8	Screw-HHF
11	32128-49	8	Nut-HHF
12	413-0027-00	4	Nut-HF, NI
13	486-0030-00	1	No Plunger Limit Switch
14	418-0032-00	2	8-32 X 1/2 Ind. HWH Slot Type F Tcs Zinc
15	434-0003-00	1	Mwr Brake Pedal Release Spring
16	148-1262	4	Screw-CARR,Patch
17	413-1005-00	4	1/2-13 Hex Flange 2-Way Rev Cntr L/Nyz
18	418-0045-00	4	3/8-16 X 1 Carriage Bolt Yz GR.8
19	413-0029-00	4	Nut-Hex

Body Styling Assembly

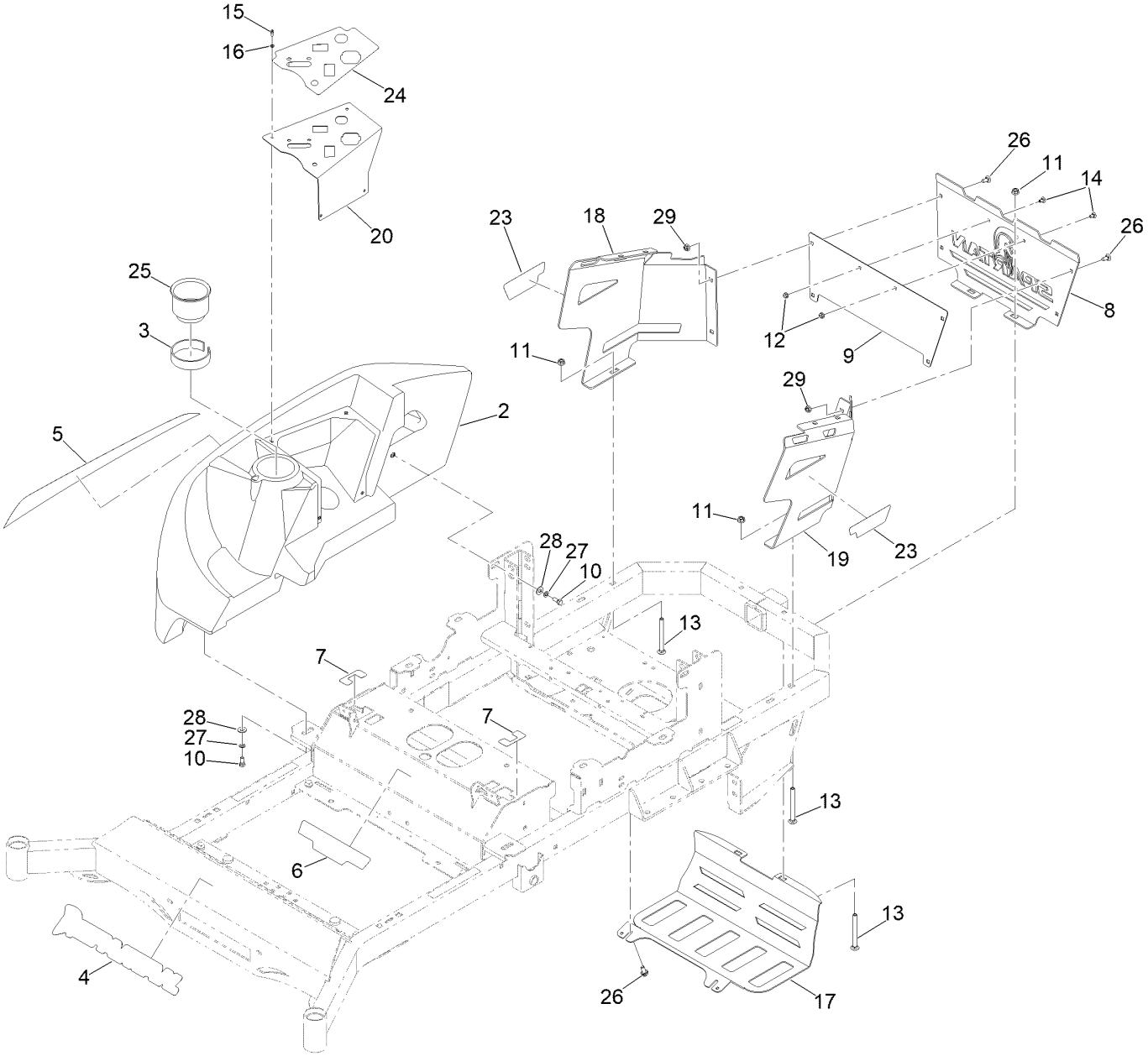

Body Styling Assembly (continued)

Ref.	Part Number	Qty.	Description
2	148-0307	1	Console W/ Cupholder
3	148-0770	1	Tape-Foam
4	148-0801	1	Decal-Spartan, Front
5	148-0845	1	Decal-Tank
6	148-1161	1	Decal-Gt Trac
7	148-1056	1	Decal-Motion Control
8	148-1067-P11	1	Plate - Engine Cowling
9	148-1068-P12	1	Plate -Backer Plate
10	418-0054-00	4	Screw-HH
11	413-0013-00	4	3/8-16 Nylon Insert Flange L/Nut Yz
12	413-0023-00	2	1/4-20 Hex Flange Nut W/Serr Zinc
13	418-0018-00	4	3/8-16 X 4 Carriage Bolt Zinc
14	418-0031-00	2	1/4-20 X 1/2 Carriage Bolt,Yz
15	418-0055-00	4	10-24 X 1/2 Socket C/S 18-8 SS
16	419-0011-00	4	#10 Split Lockwasher 18-8 SS
17	148-1172-P11	1	Muffler Guard [gray]
18	439-0691-00-P11	1	2021 Rt/Srt Engn Cowling Rtpainted
19	439-0692-00-P11	1	2021 Rt/Srt Engn Cowling Lt Painted
20	148-1042-05	1	Rt 45 Key Mnt
23	148-1160	2	Decal-Model
24	148-1097	1	Decal-Control Panel
25	780-2220-00	1	Cup Holder
26	418-0008-00	4	Bolt-CARR
27	3253-4	4	Washer-Lock
28	419-0007-00	4	Washer-Flat
29	413-0022-00	4	Nut-HF

Seat Assembly

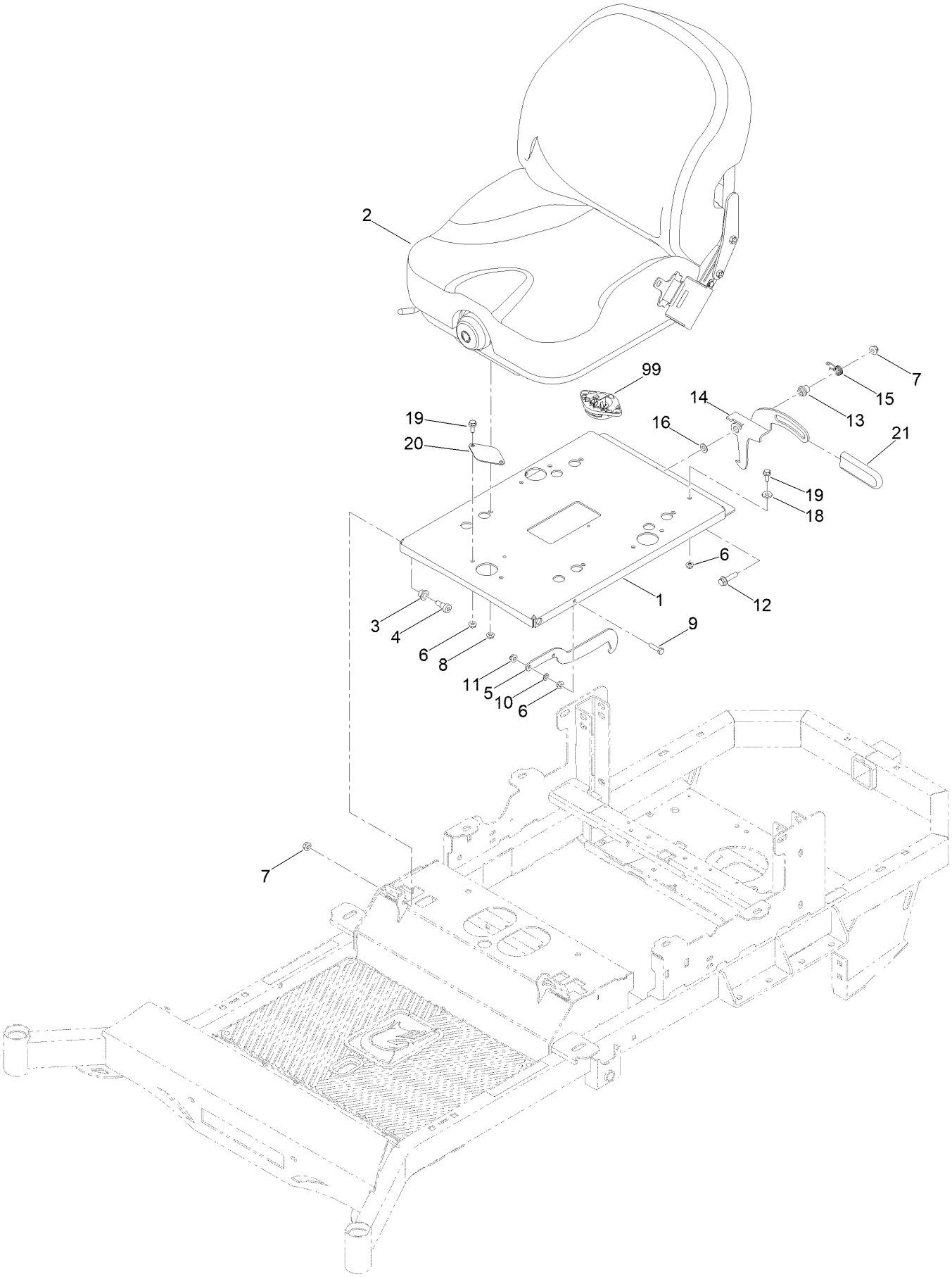

Seat Assembly (continued)

Ref.	Part Number	Qty.	Description
1	148-1008-P11	1	Plate-Seat, No360
2	471-0015-00	1	2019 Full Susp Seat
3	410-0010-00	2	1/2In ID X 5/8In OD X 1/2In Flange Bush
4	418-0038-00	2	1/2 X 1/2 Socket Shoulder Bolt Zc Yellow
5	439-0065-00-P11	1	Mwr Seat Latch Hook Paint
6	413-0022-00	4	Nut-HF
7	413-0029-00	3	Nut-Hex
8	413-0019-00	4	5/16-18 Nylon Insert Flange L/Nut Zc
9	322-47	1	Screw-HH
10	413-0016-00	1	.312Idx.625Odx.062 THK Thrust Brg Oi Brz
11	413-0027-00	1	Nut-HF, NI
12	323-9	1	Screw-HH
13	107-0075	1	Bushing-Latch, Seat
14	148-0953	1	Bracket-Latch
15	126-8923	1	Spring-Torsion, Latch
16	138-7207	1	Spacer-Hub, Blower
18	419-0006-00	1	.312 ID X .875OD X .1875 THK F/W NYL
19	116-7230	3	Screw-HHF
20	426-0241-00-P11	1	2020 Rt/Srt Univ Float Seat Cvr PLT
21	484-0002-00	1	Stand Up Mwr Brake Arm Grip
99	486-0036-00	1	Mwr Seat Switch

Motion Control and Parking Brake Assembly

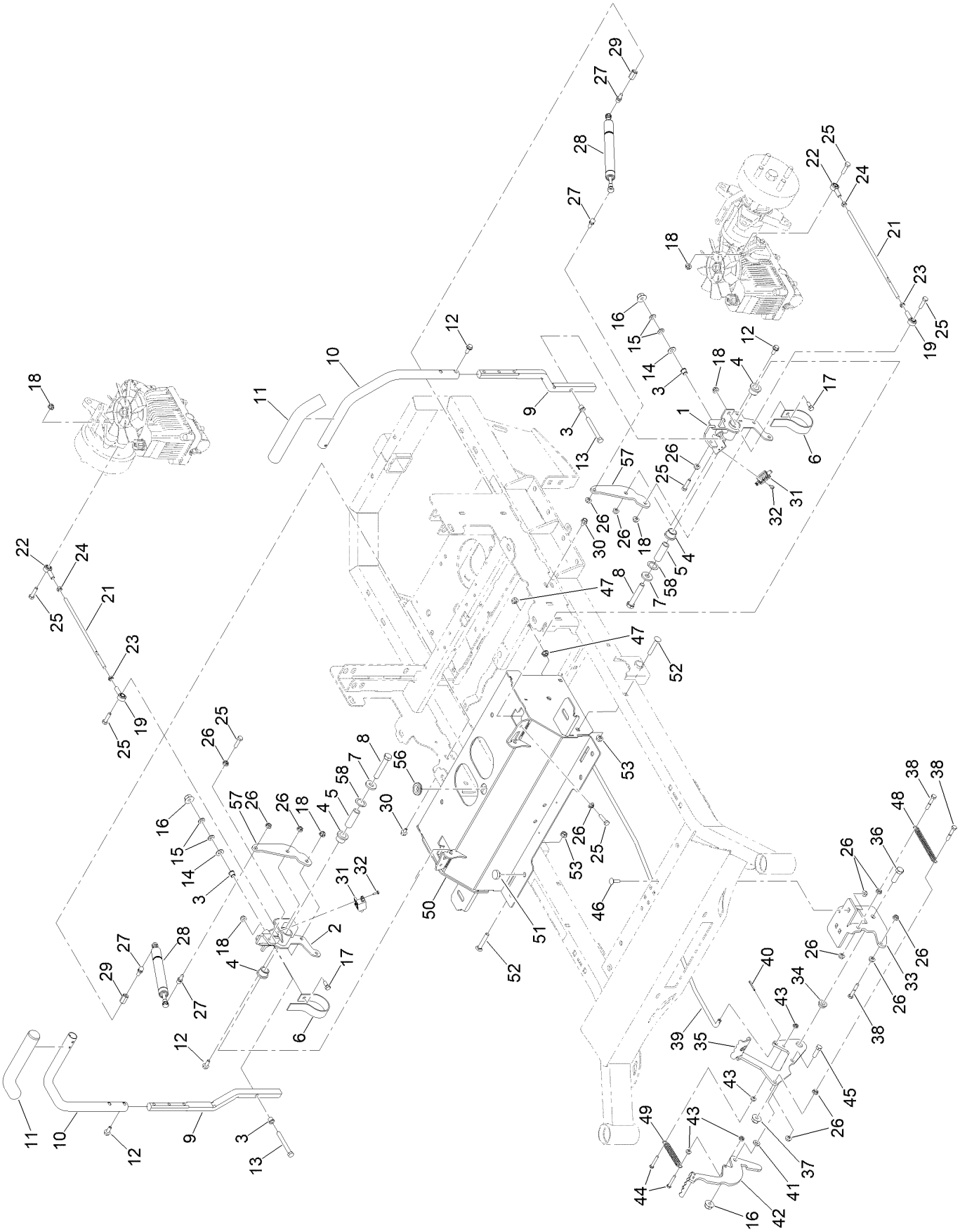

Motion Control and Parking Brake Assembly (continued)

Ref.	Part Number	Qty.	Description
1	148-0888-05	1	LH Pivot ASM
2	148-0889-05	1	RH Pivot ASM
3	148-0886	4	Bushing-Flange
4	148-0897	4	Bushing-Flange
5	148-0885	2	Sleeve-Pivot
6	109-5575	2	Spring-Leaf
7	419-0003-00	2	1/2 Fender Washer 1-1/4In OD Zinc
8	418-0050-00	2	1/2-13 X 3 Hex C/S GR 5 Zinc W/Loctite
9	431-0001-00	2	Height Adjustable Control Arm
10	403-0020-10-P11	2	Mower Drive Handle Tube Abc
11	484-0001-00	2	Control Arm Handle Grip
12	116-7230	6	Screw-HHF
13	323-20	2	Screw-HH
14	419-0007-00	2	Washer-Flat
15	148-1012	4	Washer-Belleville
16	413-0013-00	3	3/8-16 Nylon Insert Flange L/Nut Yz
17	418-0054-00	2	Screw-HH
18	413-0027-00	6	Nut-HF, NI
19	410-0070-00	2	5/16-24 Spher Rod End Zinc LH Thd Fem
21	435-0033-00	2	1310 Ttq Drive Arm Rod
22	410-0071-00	2	5/16-24 Spher Rod End Zinc RH Thd Fem
23	3220-20	2	Nut-Jam
24	09207	2	Nut
25	322-47	8	Screw-HH
26	413-0022-00	17	Nut-HF
27	487-0005-00	4	5/16-18X1.286 Damper Ball Stud (.562 Tl)
28	487-0001-00	2	Control Arm Damper
29	613-0065-00	2	Standoff-Hex
30	3234-28	2	Screw-HHF
31	486-0030-00	2	No Plunger Limit Switch
32	418-0032-00	4	8-32 X 1/2 Ind. HWH Slot Type F Tcs Zinc
33	439-0009-00-P11	1	Mwr Frame Brake Mtg Brkt Paint
34	410-0009-00	1	1/2In ID X 3/4In OD X 3/8In Flange Bush
35	490-0016-00-P11	1	Mwr Brake Lock Lever Assy Painted
36	139-2631	1	Screw-HH
37	413-0002-00	1	Nut-Lock
38	418-0027-00	3	Bolt-HH
39	435-0004-00	1	Mwr Brake Linkage
40	3272-11	1	Pin-Cotter
41	413-0052-00	1	3/8 ID X 3/4 OD X .125 THK Bronze Washer
42	490-0017-00-P11	1	Mwr Brake Unlock Lever Assy Painted
43	413-0012-00	4	1/4-20 Hex Flange Nut
44	418-0029-00	2	1/4-20 X 1-1/4 Hex C/S GR 2 Zinc
45	323-7	1	Screw-HH
46	418-0008-00	3	Bolt-CARR
47	413-0020-00	2	3/8-16 Hex Flange Nut W/Serr Zinc Yellow
48	434-0015-00	1	2020 Mwr Brake Pedal Tension Spring
49	434-0003-00	1	Mwr Brake Pedal Release Spring
50	148-0911-P11	1	ASM, Gt-Trac [gray]
51	429-0002-00	2	Push-In Rubber Bumper
52	618-2023-00	4	Screw-CARR
53	413-0029-00	4	Nut-Hex
56	240-6	1	Grommet-Rubber
57	148-1492-05	2	Plate-Damper
58	418-0110-00	2	.767Idx1.125Odx.016 THK Trip Wv Washer

Caster Tire Assembly

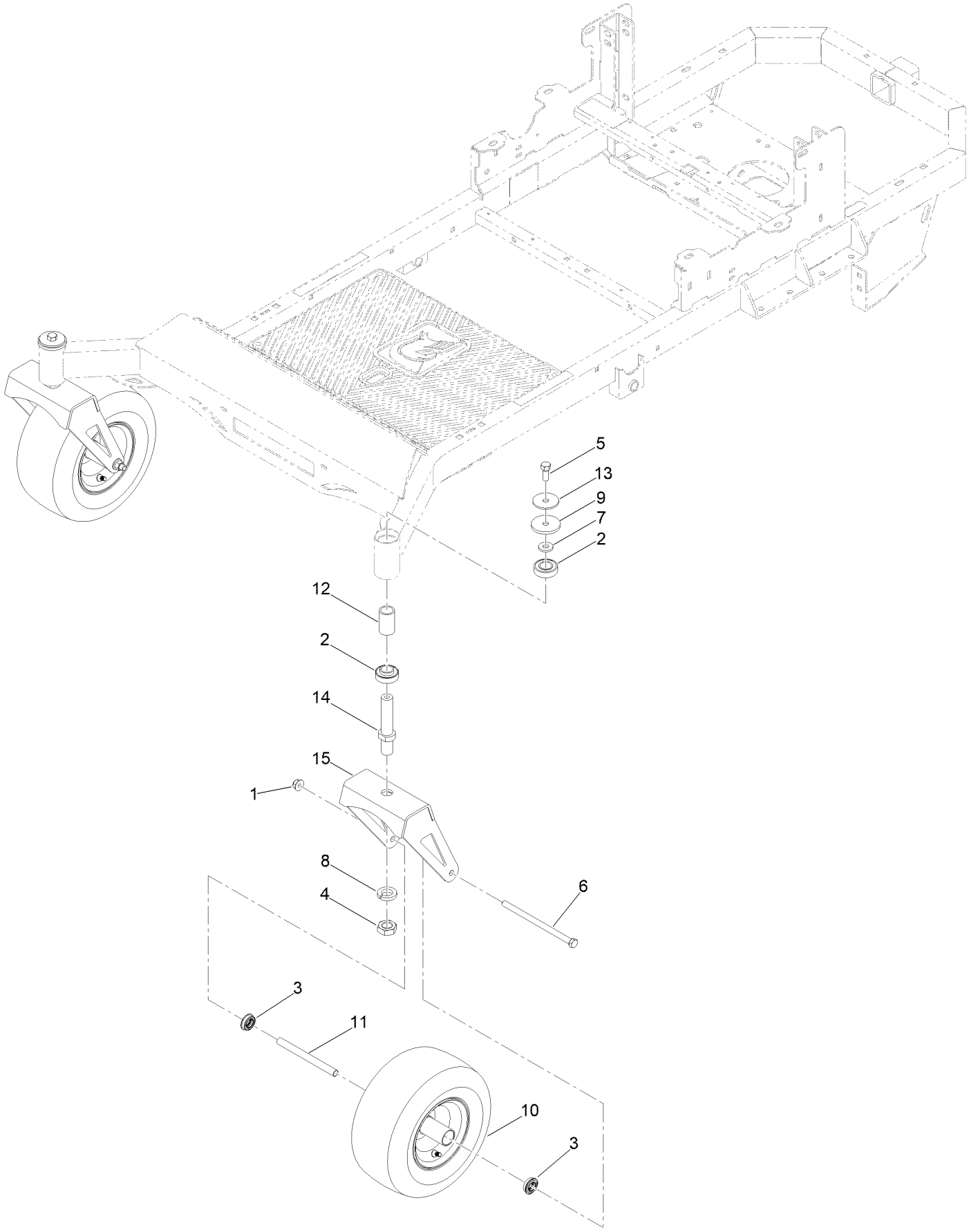

Caster Tire Assembly (continued)

Ref.	Part Number	Qty.	Description
1	413-0002-00	2	Nut-Lock
2	103-3540	4	Bearing-Ball
3	410-0018-00	4	Rz Ft Wheel Bearing
4	413-0063-00	2	Nut-Hex
5	418-0002-00	2	1/2-20 X 1-1/4 Hex Flange Bolt GR 8 Yz
6	418-0003-00	2	1/2-13 X 8-1/2 Hex C/S GR 5 Zinc Yellow
7	419-0003-00	2	1/2 Fender Washer 1-1/4In OD Zinc
8	419-0024-00	2	1In L/W Med Split Zc
9	419-0025-00	2	Ft Hub Plastic Washer
10	422-0027-00	2	Rz/Rt Pro Ft Tire Assy-Smooth Tread
11	425-0010-00	2	Mwr Ft Wheel Spanner
12	425-0011-00	2	Caster Fork Shaft Bearing Spacer
13	426-0006-00-P11	2	Mwr Caster Shaft Washer
14	437-0019-00	2	Mwr Caster Shaft
15	490-0046-00-P11	2	Rz Caster Fork ASM

Drive Wheel Assembly

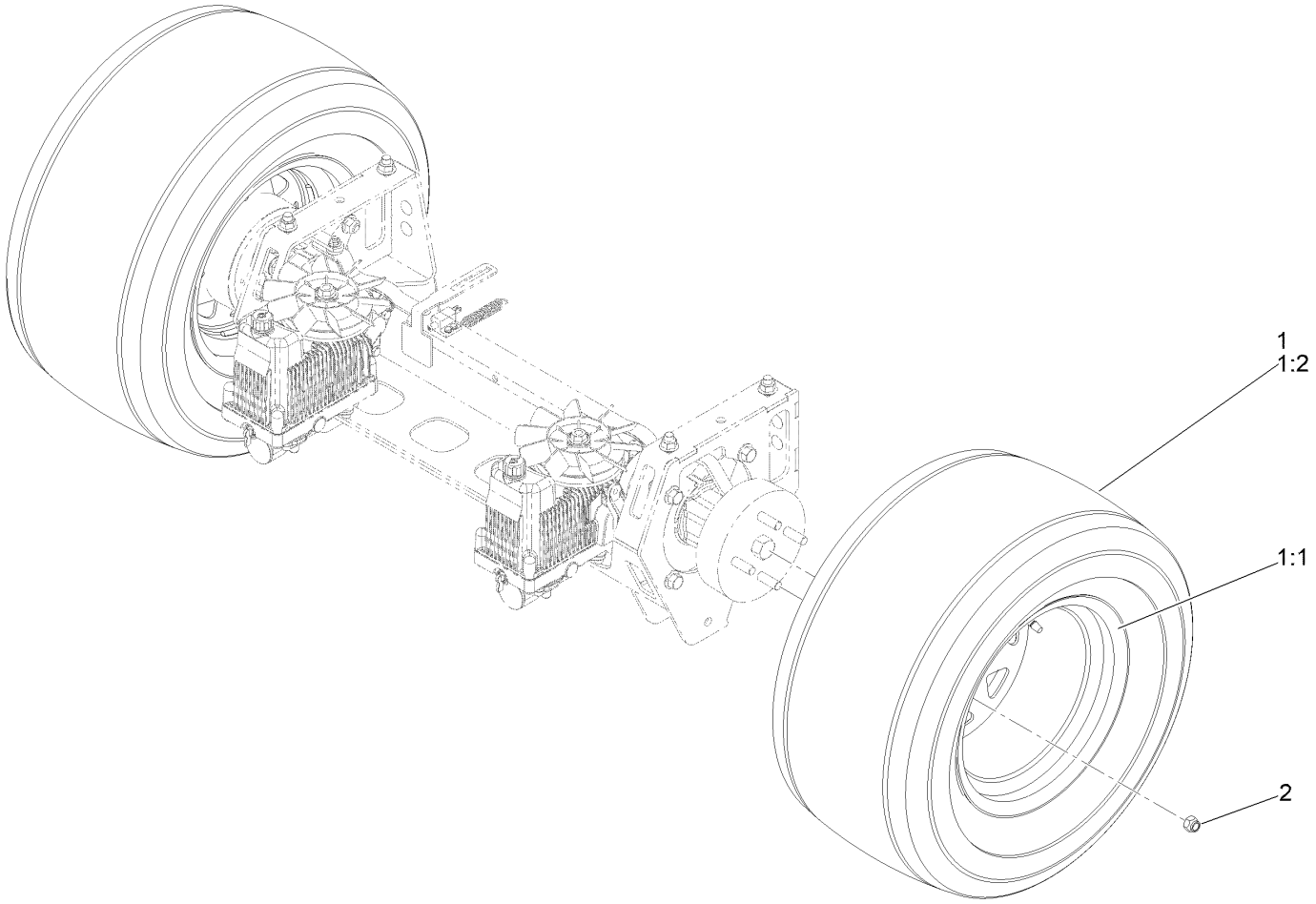

Drive Wheel Assembly (continued)

Ref.	Part Number	Qty.	Description
1	148-1009	2	Tire-ASM
1:1	148-1010	1	Wheel
1:2	148-1011	1	Tire
2	413-0015-00	8	1/2-20 Lugnut

Electrical Assembly

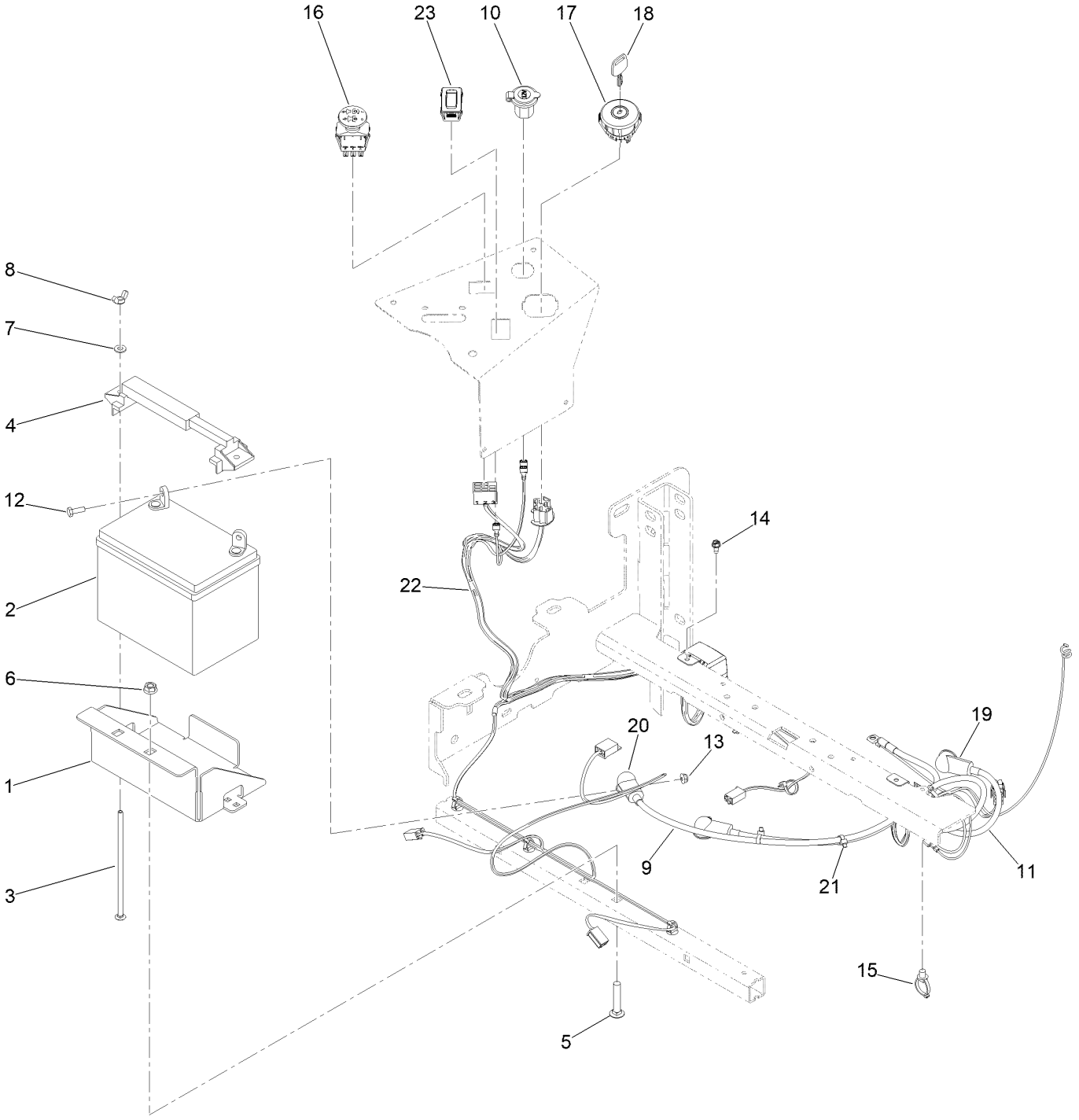

Electrical Assembly (continued)

Ref.	Part Number	Qty.	Description
1	439-0008-00-P11	1	Mwr Battery Box
2	468-1004-00	1	12 Volt Start Battery 300CCA
3	418-0034-00	2	1/4-20 X 7 Carriage Bolt Zinc
4	443-0001-00	1	Battery Hold Down
5	3231-6	2	Screw-CARR
6	413-0020-00	2	3/8-16 Hex Flange Nut W/Serr Zinc Yellow
7	515-0038	2	Washer-Flat
8	1-803038	2	Wingnut
9	486-0017-00	1	Mwr Negative Cable 28
10	677-2075-00	1	12 Volt Auxilliary Plug
11	486-0016-00	1	Mwr Positive Battery Cable 25In
12	321-4	2	Screw-HH
13	104-7201	2	Nut-HF, NI
14	120-9551	2	Screw-HWH
15	32180-030	1	Clip-Tie
16	486-0060-00	1	PTO Switch
17	486-0062-00	1	Ignition Switch
18	486-0065-00	1	2023 Mwr Key
19	436-0002-00	1	3.15 Lgth Straight Insul Term Cover Red
20	436-0003-00	1	Straight Insulating Terminal Cover
21	3290-379	6	Tie-Cable
22	148-1014	1	Harness-Wire
23	148-1063	1	Hour Meter

Decklift Assembly

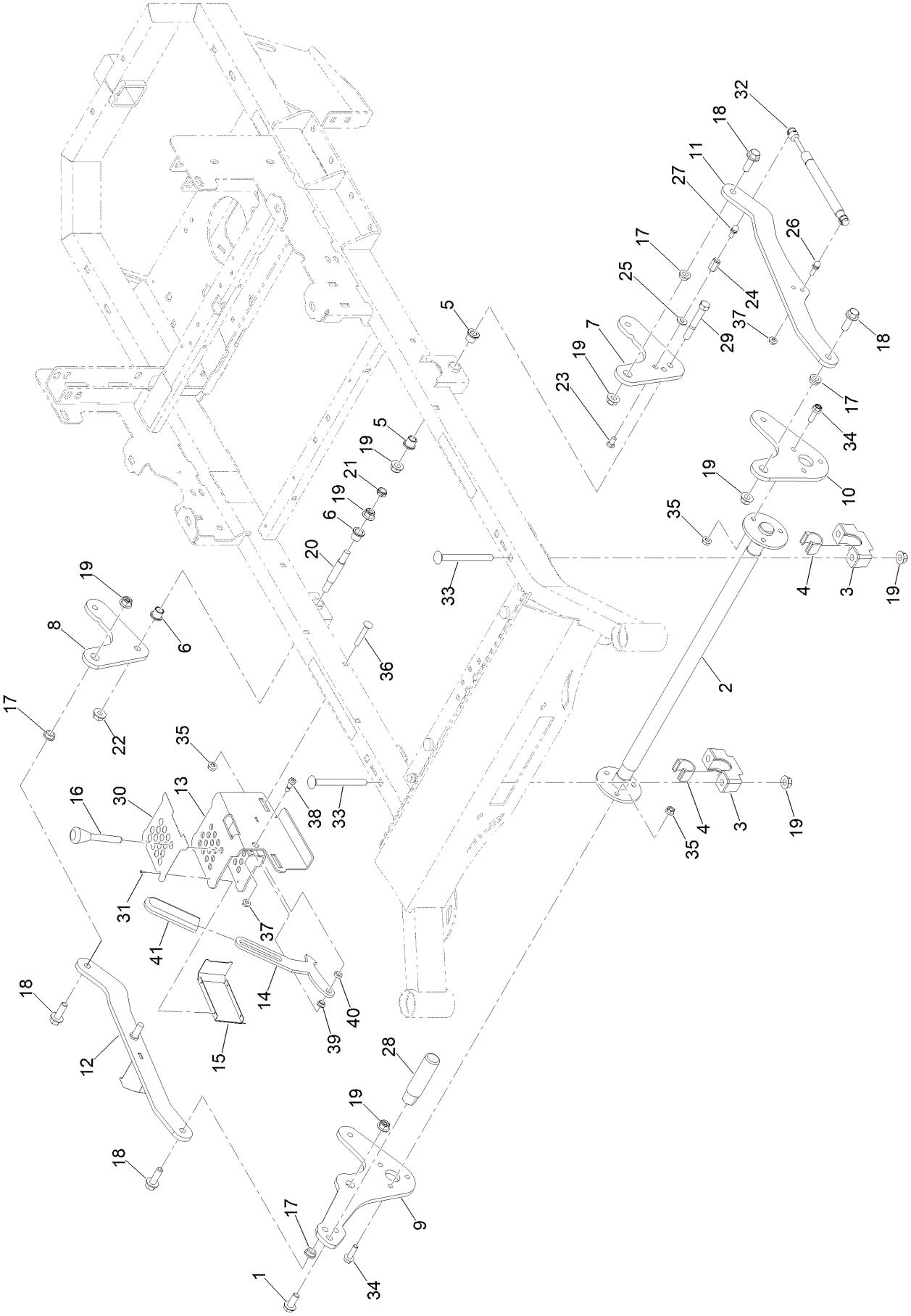

Decklift Assembly (continued)

Ref.	Part Number	Qty.	Description
1	148-0095	1	1/2-13X1.25In Hex Flange Bolt (GR.8) Yz
2	148-1074	1	Decklift ASM-Front
3	148-1085	2	Support-Bearing Housing
4	109-9410	2	Bearing-Cross Shaft, Front
5	135-5694	2	Bushing-Flange
6	135-9063	2	Bushing-Flange
7	148-1003-P11	1	(Rz Rear HOC Hanger)
8	148-0418-P11	1	Arm-Decklift Rear (3/8")
9	148-0950-P11	1	Lever-Lift
10	148-1075-P11	1	Plate-Decklift, Arm LH
11	148-0940-P11	1	Link-HOC(Left Side)
12	148-0941-P11	1	Link ASM-HOC(Right Side Welded)
13	148-0946-P11	1	Bracket-HOC ASM
14	148-0943	1	Plate-Transport Lock
15	148-0949-P11	1	Cover-HOC
16	148-1450	1	HOC Pin ASM
17	410-0009-00	4	1/2In ID X 3/4In OD X 3/8In Flange Bush
18	100-6116	4	Screw-HHF
19	413-1005-00	10	1/2-13 Hex Flange 2-Way Rev Cntr L/Nyz
20	418-0276-00	1	Rr Deck Height Bolt (Machined)
21	3296-45	1	Nut-Hex
22	32128-49	1	Nut-HHF
23	618-2068-00	1	3/8 X 3/4In GR 8 CARR Bolt Zinc
24	148-0422	1	Hex Coupling Nut - Reducer (3/8" To 5/16
25	419-0007-00	1	Washer-Flat
26	487-0008-00	1	5/16-18X1.286 Damper Ball Stud (.562 Tl)
27	487-0005-00	1	5/16-18X1.286 Damper Ball Stud (.562 Tl)
28	148-0951	1	Pedal
29	418-0042-00	1	1/2-13 X 3-1/2 Hex C/S GR 5 Zinc Yellow
30	148-1036	1	Decal-Height Of Cut
31	923786	4	Rivet
32	434-0008-00	1	Rz Deck Assist Gas Spring
33	148-1080	4	Screw-CARR
34	148-1087	6	Screw-HHF
35	413-0029-00	8	Nut-Hex
36	618-2023-00	2	Screw-CARR
37	413-0022-00	2	Nut-HF
38	418-0083-00	1	3/8 X 1/2 Socket Shoulder Bolt Yz
39	148-1211	1	Bushing-Flange
40	148-1212	1	Washer-Plain
41	484-0002-00	1	Stand Up Mwr Brake Arm Grip

HOC Pin Assembly No. 148-1450

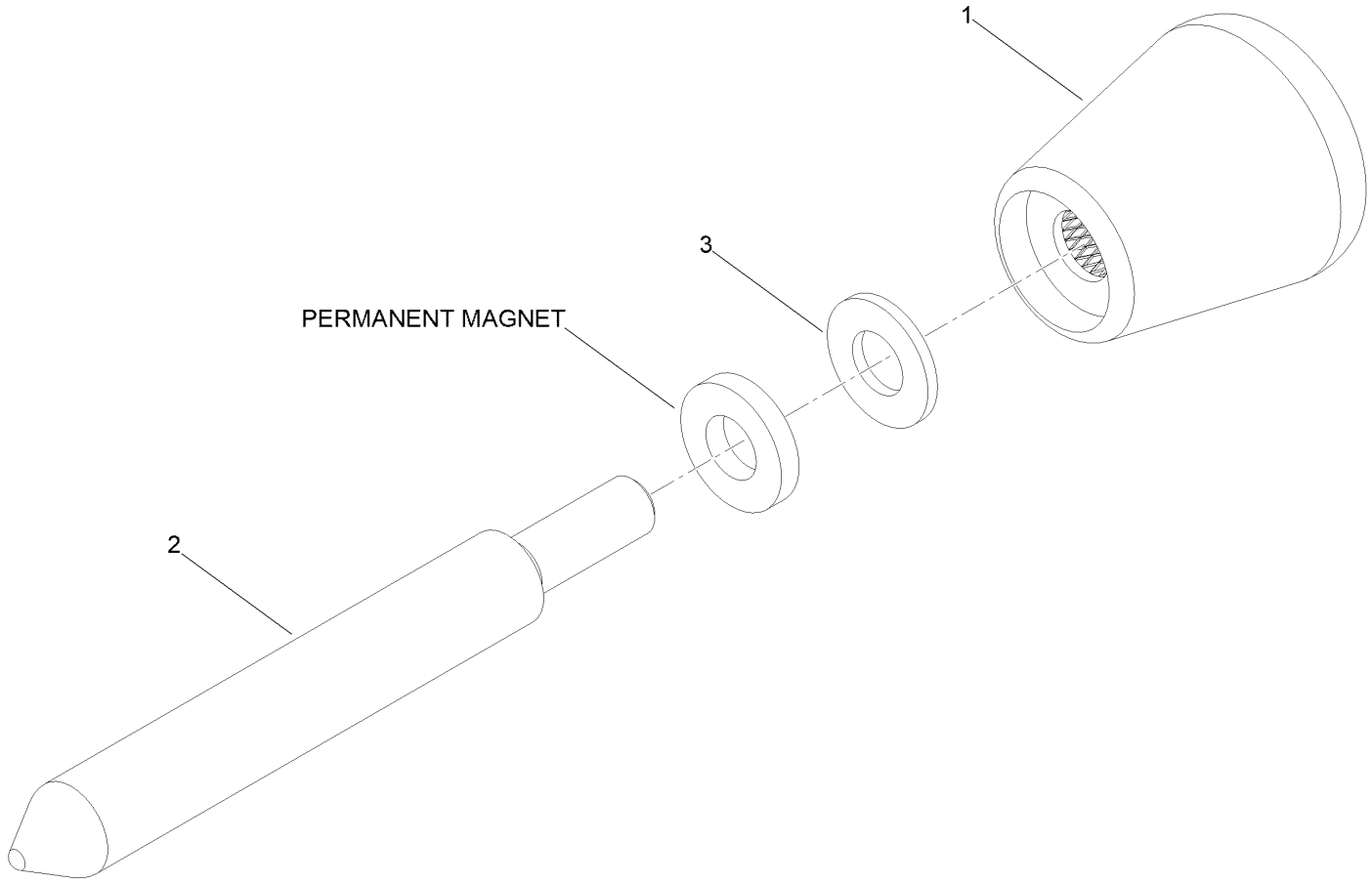

HOC Pin Assembly No. 148-1450 (continued)

Ref.	Part Number	Qty.	Description
1	126-7390	1	Knob-Tapered
2	148-1451	1	Pin-HOC
3	3256-23	1	Washer-Plain

Engine Assembly

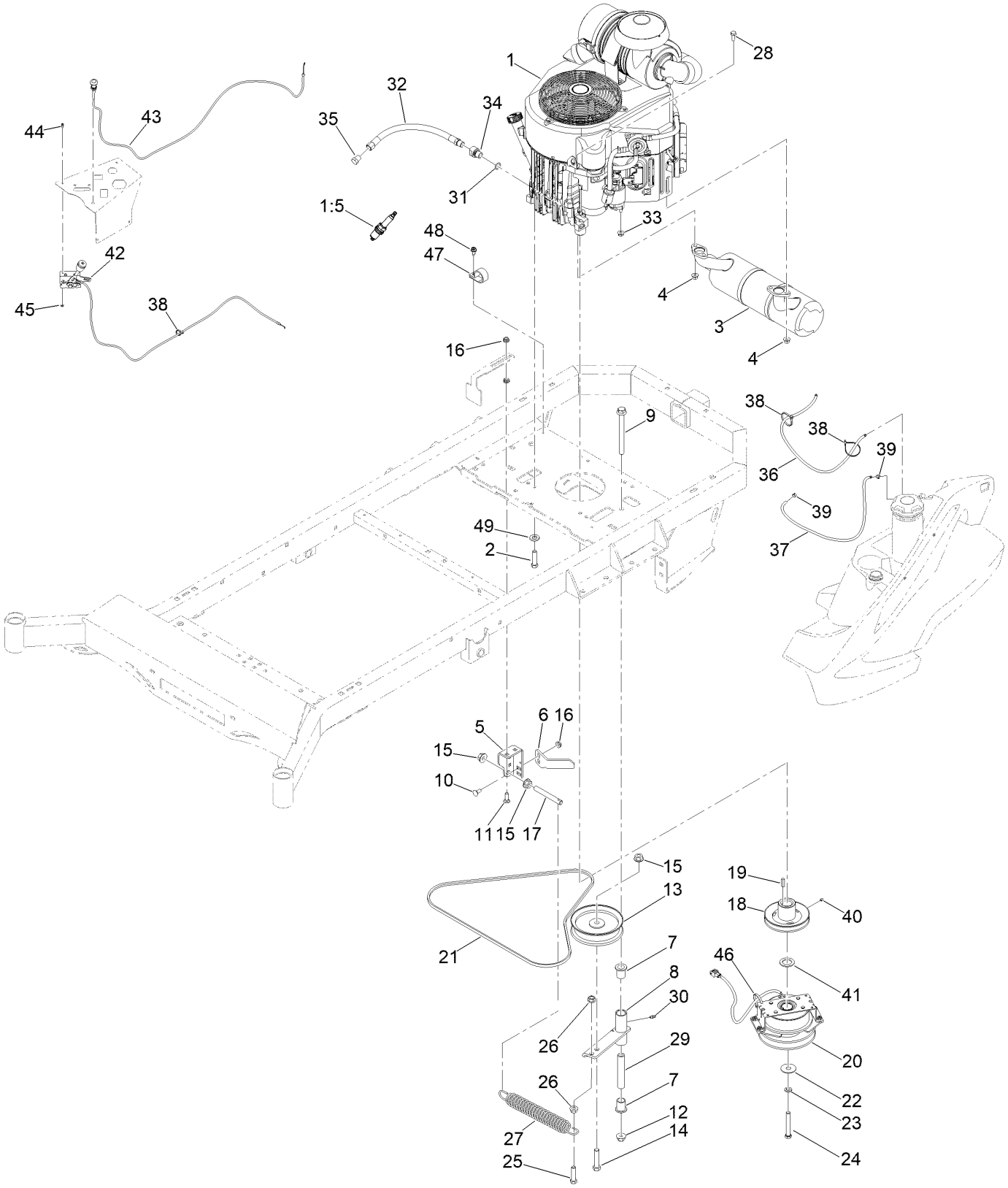

Engine Assembly (continued)

Ref.	Part Number	Qty.	Description
1		1	Engine-Kawasaki, Fx730V ■▲
1:1	119-5852	1	Filter-Oil ●
1:2	142-6949	1	Filter-Fuel ●
1:3	119-5945	1	Element-Filter, Air (Inner) ●
1:4	119-5944	1	Element-Filter, Air (Outer) ●
1:5	92-2153	2	Plug-Spark
2	323-50	4	Bolt-HH
3	148-0193	1	Exhaust
4	104-2612	4	Nut-HF
5	439-0244-00-05	1	Mwr Pump Idler Tensioning Brkt Black
6	439-0493-00-05	1	2021 Ttq Mower Ogura Clutch Bracket
7	410-0007-00	2	3/4In ID X15/16In OD X 1-1/8In Flng Bush
8	490-0018-00-05	1	Mwr Pump Idler Assy Black
9	418-0009-00	1	1/2-13 X 5-1/2 Hex Flange Bolt GR 8 Zy
10	418-0008-00	2	Bolt-CARR
11	418-0062-00	2	5/16-18 X 1-1/4 Carriage Bolt Zc/Yel
12	413-0002-00	2	Nut-Lock
13	433-0013-00	1	5-3/4In Idler Pulley 7/16In Spacer Assy
14	325-9	1	Screw-HH
15	32128-49	2	Nut-HHF
16	413-0022-00	6	Nut-HF
17	430-0001-00	1	Mwr Pump Idler Spring Tensioner
18	433-0001-00	1	Mwr Hydraulic Pump Drive Pulley (A Belt)
19	1-807259	1	Key
20	470-0004-00	1	Mwr Ttq Ogura Clutch
21	461-0004-00	1	Mwr Pump Belt Rt A X 68.25In Eff Lngth
22	419-0001-00	1	1/2In X 1-5/8 Belleville Cup Washer Yz
23	3253-6	1	Washer-Lock
24	418-0223-00	1	Ttq Clutch Bolt
25	418-0013-00	1	Bolt-HH
26	32128-37	2	Nut-HF
27	434-0007-00	1	Mwr Deck Spring
28	418-0278-00	1	M8-1.25 X 20MM Hex Flange Bolt Zinc 10.9
29	425-0006-00	1	Mwr Inner Idler Spacer
30	424-0002-00	1	1/4In Drive Type Grease Fitting Yz
31	139-8387	1	Ring-O,15.8X2.4
32	117-1261	1	Hose-Drain, Oil
33	112-2844	1	Nut-HF
34	148-1263	1	3/8" FNPT To M20X2.5 Adapter 59071-7023
35	148-1266	1	3/8 MNPT Oil Plug
36	451-0002-00	32	Mwr Fuel Tank Black 3/16In Vent Tube 1Ft
36	451-0002-00RT06	1	Mwr Fuel Tank Blk 3/16 Vent Tube
37	751-1014-00	6	1/4In SAE J30R7 Bulk Hose 1Ft
38	3290-379	3	Tie-Cable
39	472-0004-00	2	1/2In (#8) Hose Clamp
40	418-0280-00	1	5/16-18 X 3/8 Socket Set Screw
41	3-6781	1	Washer-Flat
42	464-0001-00	1	Mwr Throttle Cable Assy W / Handle
43	464-0002-00	1	Mwr Choke Cable Assm
44	418-0055-00	2	10-24 X 1/2 Socket C/S 18-8 SS
45	110-3145	2	Nut-Lock
46	414-0001-00	1	6In (40 Lb) Cable Tie Nylon Uv
47	472-0002-00	1	1/2In Cushioned Loop Clamp
48	120-9551	1	Screw-HWH
49	115-1166	4	Washer-Plain

● Not illustrated
▲ Obtain parts from www.kawpower.com
■ Not serviced separately

54 Inch Cutting Deck Assembly

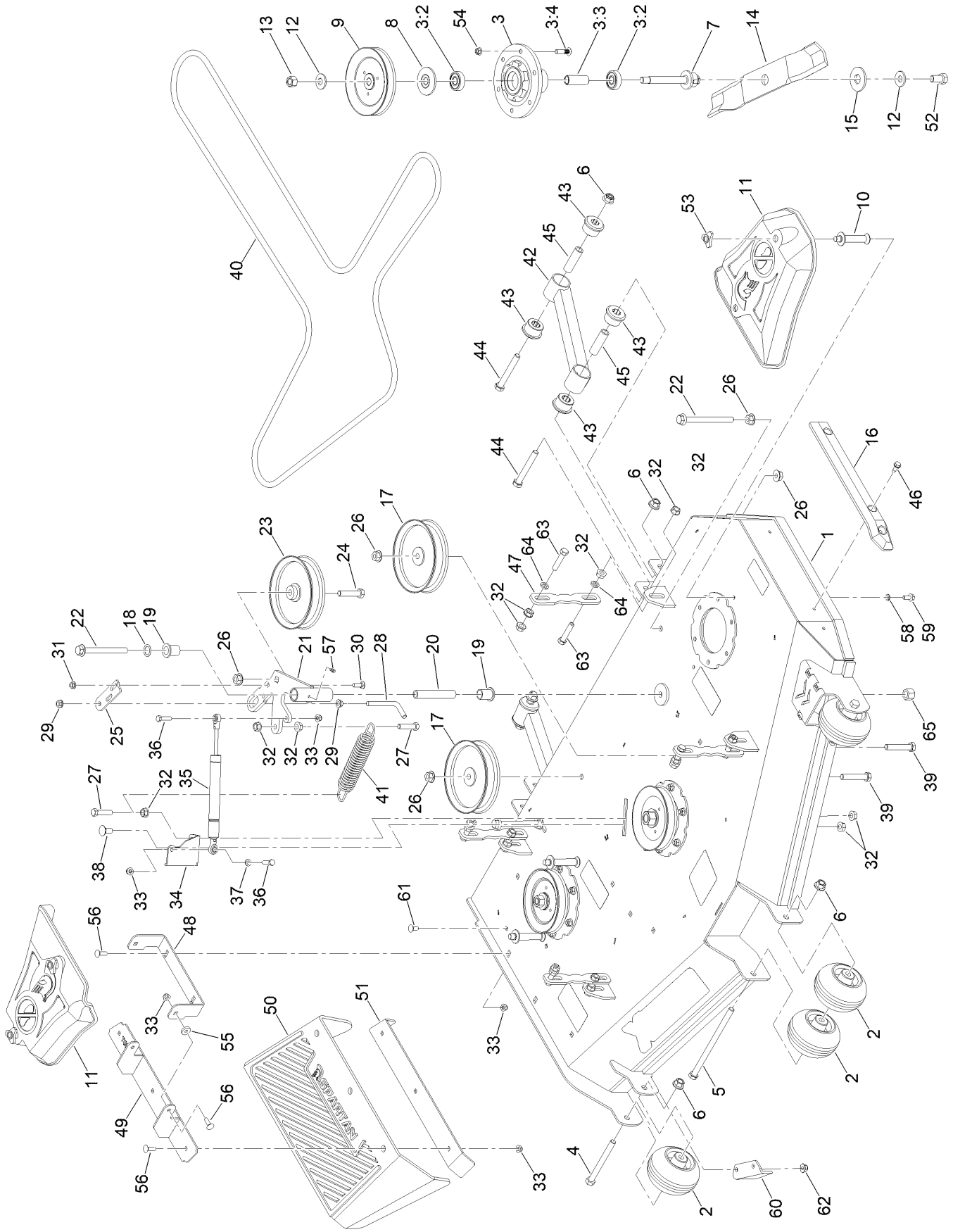

54 Inch Cutting Deck Assembly (continued)

Ref.	Part Number	Qty.	Description
1	148-0977	1	54 Inch Deck ASM W/Decals
2	422-0061-00	4	Mwr Anti-Scalp Whl W/O Grease Fitting
3	148-0002	3	Spindle ASM 5In Deck
3:2	116-4004	2	Bearing
3:3	148-0025	1	Spacer, Bearing
3:4	116-3473	6	Bolt-Round Head
4	418-0016-00	2	Screw-HH
5	418-0015-00	1	1/2-13 X 8-1/2 Hex C/S GR 2 Zinc Yellow
6	413-0002-00	7	Nut-Lock
7	148-0105	3	Shaft - Spindle
8	148-0102	3	Guard-Bearing Top 0.673In
9	148-0028	3	Pulley
10	148-0094	4	Pin-Belt Cover
11	148-0092	2	Cover Belt
12	148-0114	6	M16 Spring Washer (39Mmod/ 3.9MM THK)
13	148-0112	3	M16X1.5 C8.8 Hex Nut
14	148-0098	3	Blade-Rotary
15	148-0108	3	Washer-Hex
16	429-0001-00	1	Mwr Nylon Deck Guard
17	433-0015-00	2	6-3/4In Idler Pulley 15/16In Spacer Assy
18	418-0110-00	1	.767Idx1.125Odx.016 THK Trip Wv Washer
19	410-0007-00	2	3/4In ID X15/16In OD X 1-1/8In Flng Bush
20	425-0006-00	1	Mwr Inner Idler Spacer
21	490-0019-00-P11	1	Mwr Deck Idler Pulley Arm Assy Paint
22	418-0009-00	3	1/2-13 X 5-1/2 Hex Flange Bolt GR 8 Zy
23	433-0014-00	1	6-3/4In Idler Pulley 7/16In Spacer ASM
24	325-9	1	Screw-HH
25	439-0257-00-P11	1	Deck Idler Pulley Belt Retnr Brkt Paint
26	32128-49	7	Nut-HHF
27	324-7	2	Screw-HH
28	148-1137	1	Bolt-L
29	413-0020-00	2	3/8-16 Hex Flange Nut W/Serr Zinc Yellow
30	418-0010-00	2	Bolt-CARR
31	413-0022-00	2	Nut-HF
32	32128-37	21	Nut-HF
33	413-0027-00	9	Nut-HF, NI
34	439-0335-00-P11	1	Deck Belt Idler Damper Mtg Brkt Painted
35	434-0009-00	1	Idler Gas Spring
36	322-47	2	Screw-HH
37	413-0016-00	1	.312Idx.625Odx.062 THK Thrust Brg Oi Brz
38	3232-1	1	Screw-CARR
39	418-0246-00	2	1/2-13 X 2-3/4 Hex Flange Bolt (GR.8) Yz
40	461-0001-00	1	54 Deck Belt
41	434-0007-00	1	Mwr Deck Spring
42	490-0047-00-05	2	Rz Mwr Deck Stablzr Assy
43	732-2000-00	8	Red A80 Susp Bushing
44	418-0021-00	4	1/2-13 X 3-3/4 Hex C/S (GR.5) Zc/Yel
45	732-2001-00	4	UTV A-Arm Bushing Sleeve
46	9264964	3	Screw-HWH, Thread Cut
47	148-0236-P11	4	Hanger-Deck Painted Grey
48	148-0999-00-P11	1	Bracket-Chute
49	148-0836-P11	1	Deck Chute Hinge ASM
50	481-0010-00	1	Rz Mwr Rubber Discharge Chute
51	439-0431-00-05	1	Mwr Deck Chute Hinge Backer Brkt
52	148-0109	3	M16X1.5-30MM C10.9 Hex Bolt
53	148-0234	4	Nut-Knob
54	413-0029-00	18	Nut-Hex
55	419-0006-00	2	.312 ID X .875OD X .1875 THK F/W NYL
56	418-0060-00	7	5/16-18 X 1 Carriage Bolt GR 8 Yz
57	424-0002-00	1	1/4In Drive Type Grease Fitting Yz
58	3253-4	4	Washer-Lock
59	116-7230	4	Screw-HHF
60	107-8541-05	1	Baffle-Discharge
61	3231-27	2	Screw-CARR
62	119-4042	2	Nut-HF, NI
63	324-8	8	Screw-HH
64	419-0010-00	8	.443 ID X .749 OD X .125 THK Nylon Black
65	3296-23	1	Nut-Lock, NI

Deck Decal Assembly No. 148-0977

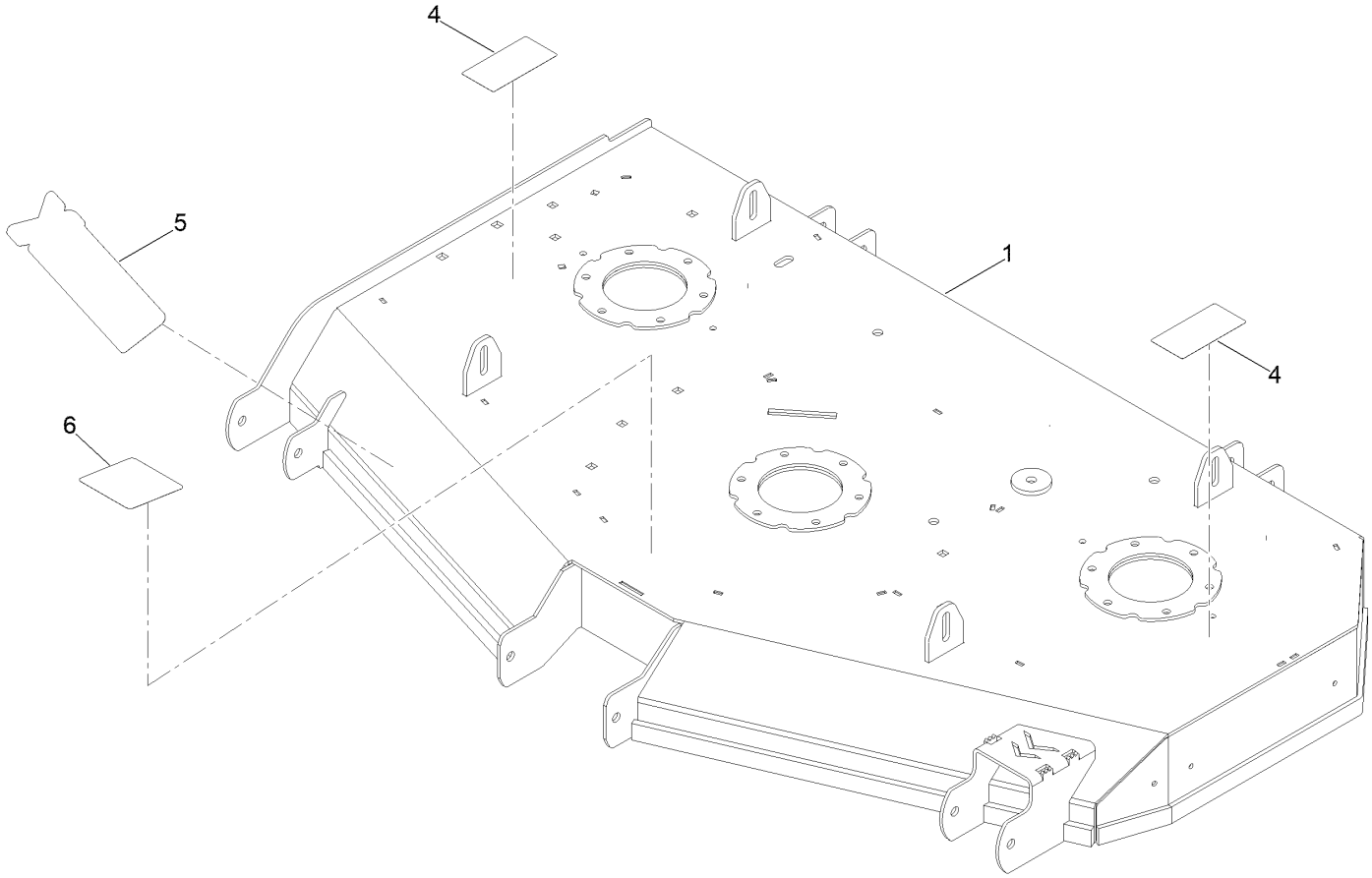

Deck Decal Assembly No. 148-0977 (continued)

Ref.	Part Number	Qty.	Description
1		1	54In Deck ●
4	161-6620	2	Decal-Danger, Deck
5	148-0779	1	Decal-Xtf
6	148-1479	1	Decal-Belt Routing

● Not serviced separately

Seat Suspension Assembly

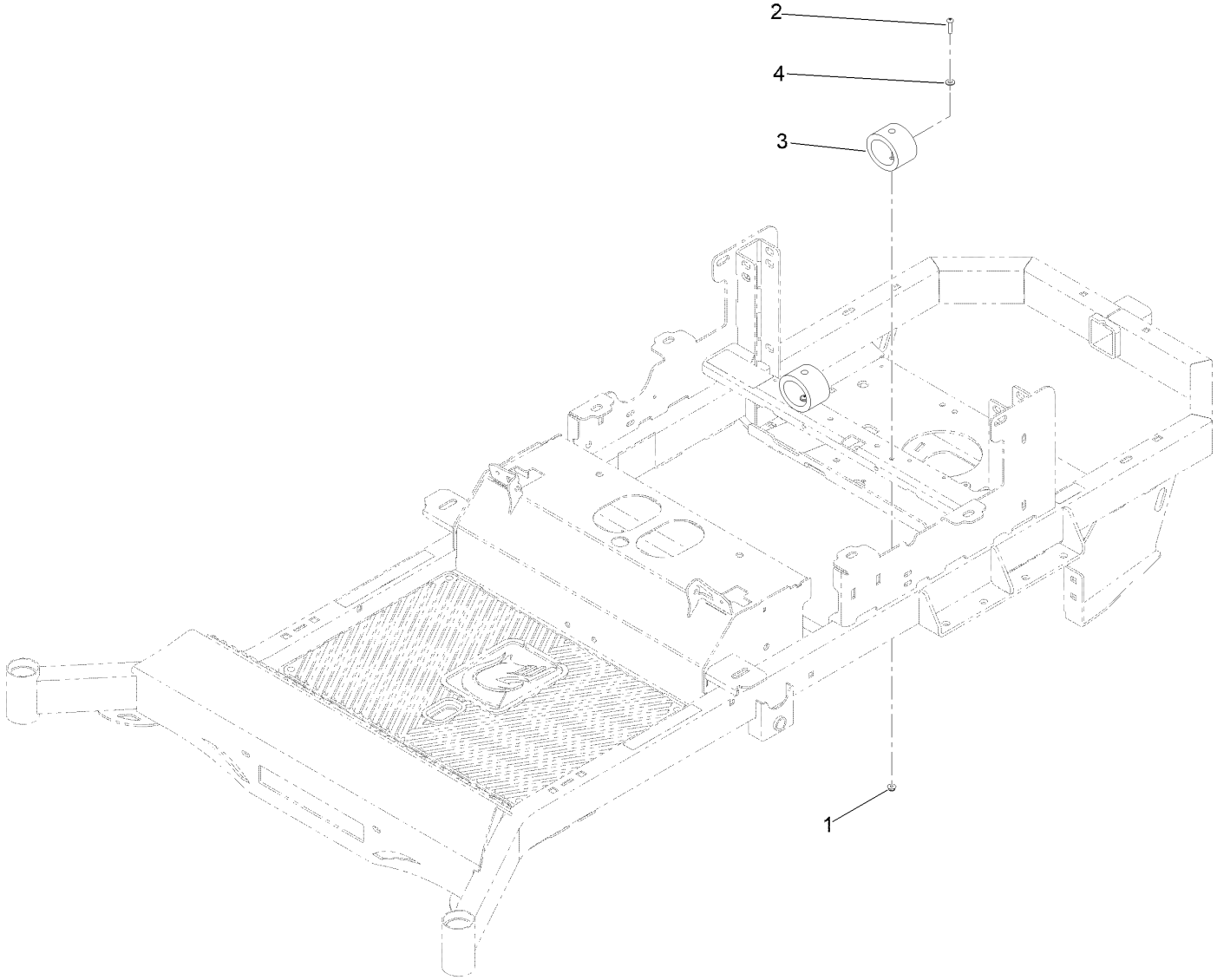

Seat Suspension Assembly (continued)

Ref.	Part Number	Qty.	Description
1	104-7201	2	Nut-HF, NI
2	418-0039-00	2	1/4-20 X 1 Button Socket C/S 18-8 SS
3	487-0004-00	2	Seat Rr Susp Elastomer
4	515-0038	2	Washer-Flat

Notes:

Notes:

SPARTAN